PERFORATED STEEL DECKING
For: Rapid Water Drain

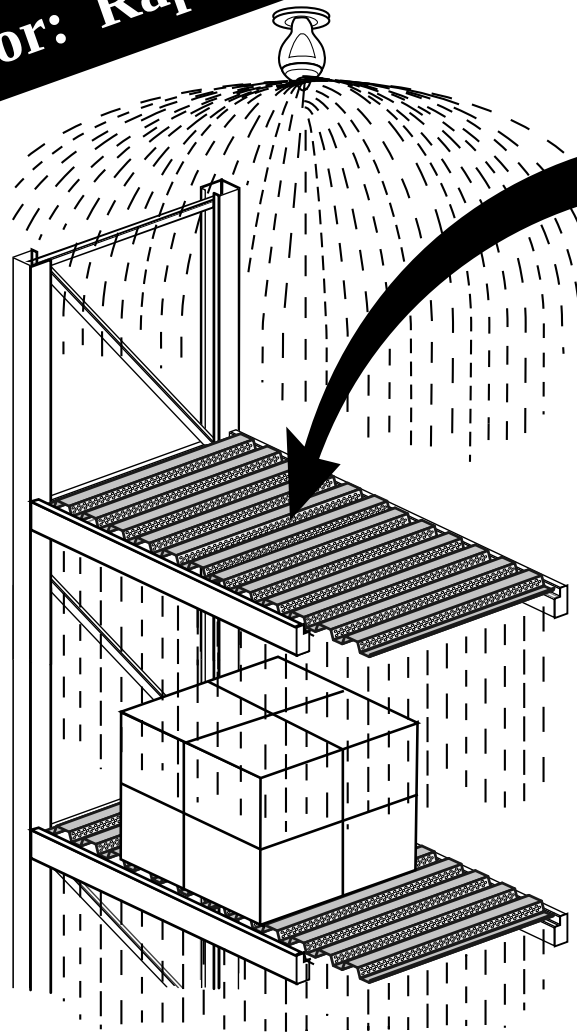

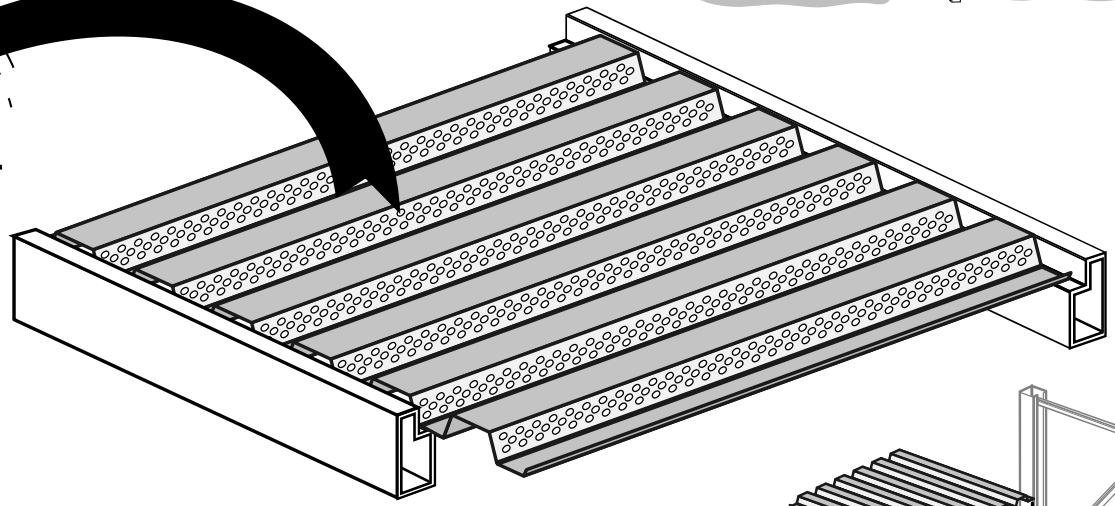

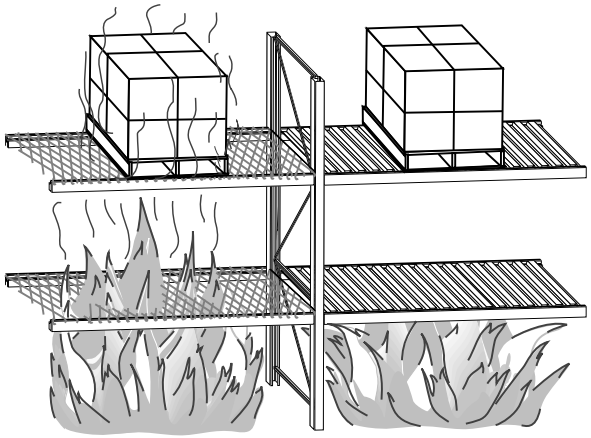

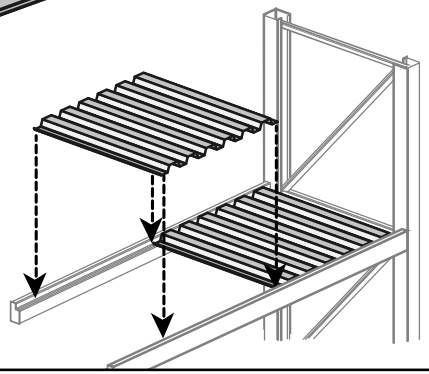

Rack Deck by DACS

Williamsburg, VA

Distributed By:

DATE	LET	FREQ	REVISIONS	BY	CK	APPD	DATE	LET	FREQ	REVISIONS	BY	CK	APPD

RD-LIT-031A

Copyright ©